Part Number	Slide Length	Slide Travel	A	B	C	D	E	F	G	H	J	K	M	N	P	Q	R
9301-E10	10.00 [254.0]	10.00 [254.0]						4.06 [103.1]	5.06 [128.5]	5.81 [147.6]	6.56 [166.6]				6.00 [152.4]	8.25 [209.6]	9.00 [228.6]
9301-E12	12.00 [304.8]	12.00 [304.8]						6.06 [153.9]	7.06 [179.3]	7.81 [198.4]	8.56 [217.4]				8.00 [203.2]	10.25 [260.4]	11.00 [279.4]
9301-E14	14.00 [355.6]	14.00 [355.6]						8.06 [204.7]	9.06 [230.1]	9.81 [249.2]	10.56 [268.2]				10.00 [254.0]	12.25 [311.2]	13.00 [330.2]
9301-E16	16.00 [406.4]	16.00 [406.4]	5.00 [127.0]					10.06 [255.5]	11.06 [280.9]	11.81 [299.9]	12.56 [319.0]				12.00 [304.8]	14.25 [361.9]	15.00 [381.0]
9301-E18	18.00 [457.2]	18.00 [457.2]	5.00 [127.0]				9.69 [246.1]	12.06 [306.3]	13.06 [331.7]	13.81 [350.8]	14.56 [369.8]				14.00 [355.6]	16.25 [412.8]	17.00 [431.8]
9301-E20	20.00 [508.0]	20.00 [508.0]	5.00 [127.0]	7.50 [190.5]			11.69 [296.9]	14.06 [357.1]	15.06 [382.5]	15.81 [401.6]	16.56 [420.6]				16.00 [406.4]	18.25 [463.6]	19.00 [482.6]
9301-E22	22.00 [558.8]	22.00 [558.8]	5.00 [127.0]	7.50 [190.5]			13.69 [347.7]	16.06 [407.9]	17.06 [433.3]	17.81 [452.4]	18.56 [471.4]				18.00 [457.2]	20.25 [514.4]	21.00 [533.4]
9301-E24	24.00 [609.6]	24.00 [609.6]	5.00 [127.0]	7.50 [190.5]			15.69 [398.5]	18.06 [458.7]	19.06 [484.1]	19.81 [503.2]	20.56 [522.2]				20.00 [508.0]	22.25 [565.2]	23.00 [584.2]

ALLEGIS CORPORATION

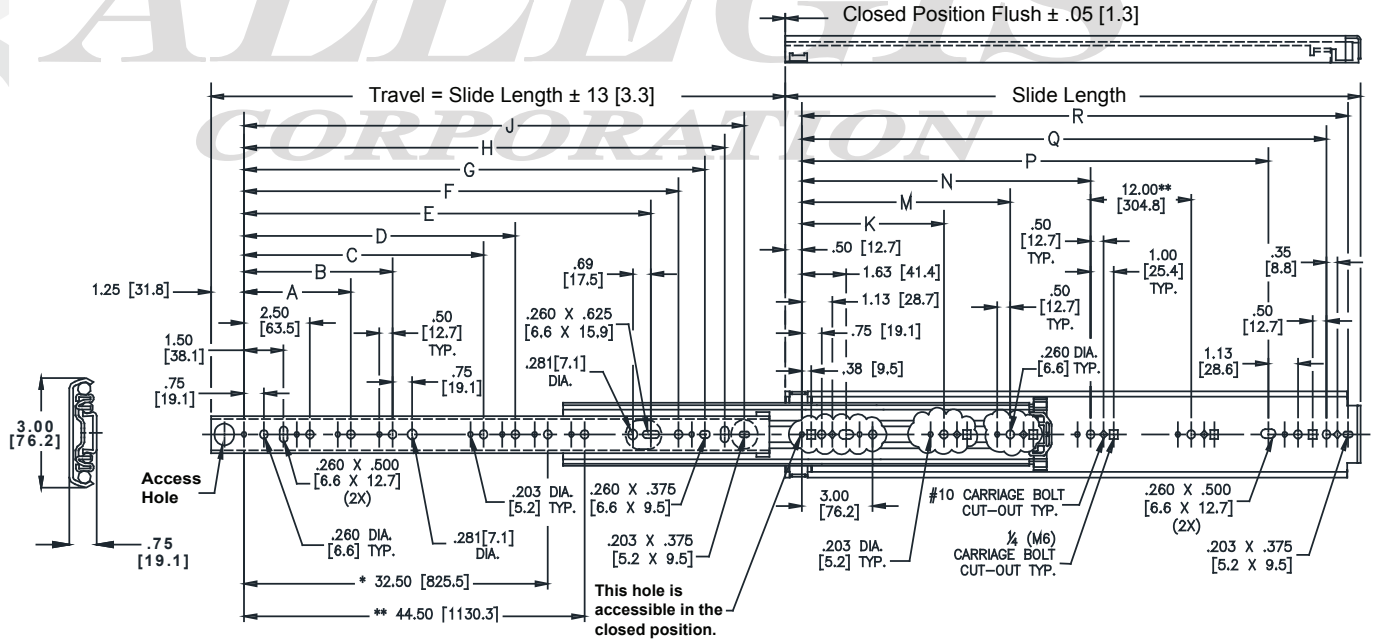

www.ALLEGISCORP.com 1-866-378-7550		MATERIAL / FINISH : Cold rolled Steel	
REV. : 1 : 2	DATE : 2-20-2017	DESCRIPTION : Drawer Slide	DRAWING NO. : 9301E Series (See Chart)